PRODUCT SHEET

Description:
Shower Hinge "CPH", Wall/Glass,Alu-Look,No Adjustment,Centre Back Plate, 6-10mm Glass Thickness,No Angle Adjustment, Function, 25DG Return Function, Brass Material, Chamfered, Edges

Item number:
15.23.812-9

Units	Box	Carton	HS Code	Barcode
Pcs.	1	20	8302100090	5704866059817

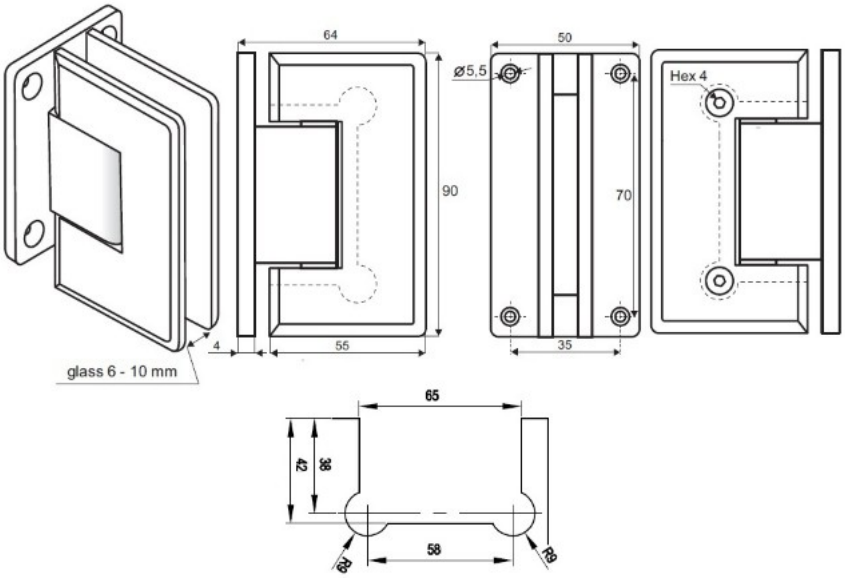

SISO A/S
Mileparken 11
DK-2740 Skovlunde
Denmark
VAT: DK 24786013

Phone +45 45 830 900

www.siso.dk
siso@siso.dk

Danske Bank
Nytorv Branch
Copenhagen
SWIFT: DABADKKK

Account no.
4180 3112 112936
IBAN Account
DK7230003112112936